CENTRALIGN® Ultra

EXPERT – Reduce steam and gas turbine outage using laser alignment

Turbine alignment with high accuracy in less time

CENTRALIGN® Ultra Expert

The new generation laser alignment system CENTRALIGN® Ultra has been specifically developed for alignment of steam and gas turbines. The system is used for precise alignment of internal elements of rotating machines such as bearing rings, diaphragms, nozzles, inner shells and turbine casings; with upper halves installed or off, for distances up to 40 m (130').

CENTRALIGN® Ultra offers a more accurate laser optical measurement alternative to piano wire, micrometers and cumbersome theodolite telescopes. Electronic communication between measuring sensors and the ROTALIGN® Ultra computer eliminates human reading errors which occur with traditional measurement systems. Stable wireless data transmission ensures reliable and convenient transfer of complete measurement information, including the position of the elements.The unique control sensor system, an additional fixed sensor monitoring the laser drift at the end of the machine, automatically secures the measurement accuracy over long distances and long measurement periods when the laser stability is more subject to impact by variations of air density, temperature or light. The combination of a precise and stable laser, and an automatic control sensor helps ensure highest accuracy. Centerline alignment, such as that of turbines, has always posed a measurement challenge in terms of time and effort. CENTRALIGN® Ultra saves extensive amounts of time and the effort needed in traditional methods to position the piano wire or bar/measurement shaft (arbor) into place and reposition it each time an adjustment is made. The system calculates the center of each individual element and displays their locations, relative to each other on the screen. The desired centerline may be adjusted to determine the best fit line and minimize corrections. Preset values can be set with vertical and horizontal values or left/bottom/right values.

Advantages at a glance

- Ability to measure more than 3 points guarantees better accuracy
- Integrated inclinometer: measurement can be started at any angular position and performed in any direction
- Wireless data transmission for a more convenient alignment
- Control sensor for automated compensation of potential laser drift
- Enter the reference line position, the rotor sag and the thermal growths
- Exclusive bracket and measurement technology for true bore center measurement

CENTRALIGN® Ultra uses a control sensor to automatically compensate for potential laser drift and warns the user should the drift exceed the set limits.

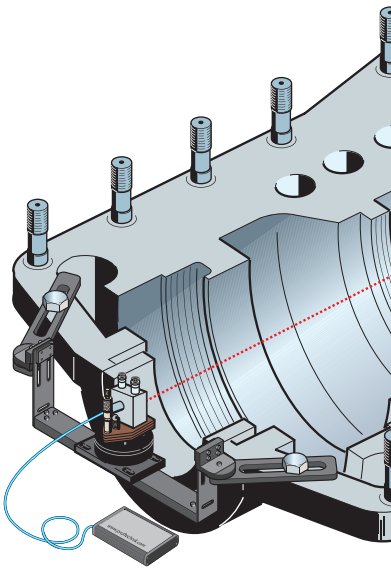

Precise, fast and intuitive bore alignment

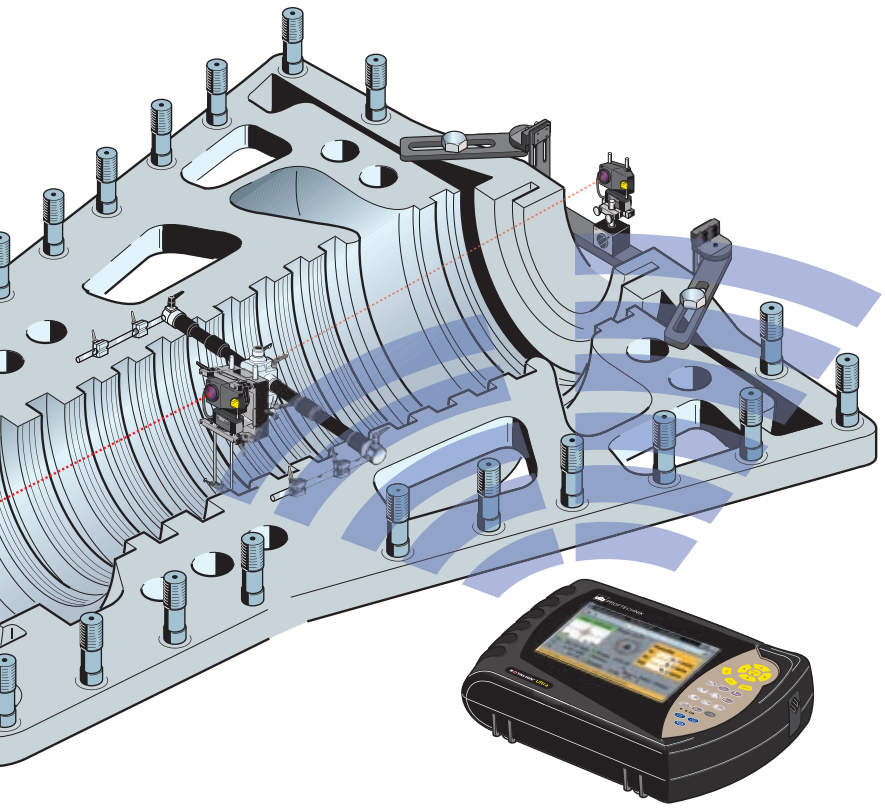

System Highlights

- Simple, straightforward and quick measurement process up to 40 m (130’)
- Precise and user-independent measurements and results
- Reduction in duration of overhauls
- No necessity to install the rotors for measurements
- Bracket range covering diameters ranging from 120 mm (4.75”) to 4230 mm (166.5”)
- Measurement of both magnetic and nonmagnetic bores as well as tops-on and tops-off
- Corrections for each element are displayed instantly
- Detection of deformations and out of roundness of elements
- Optimal choice of centerline for the entire assembly with minimal correction values for each element
- Live move function to monitor in real time the alignment corrections
- Powerful built-in splice function maximizes measurement flexibility and extends measurement range
- Instantly display corrections for each bore
- Monitor real time corrections

Precision alignment in three steps

Quick and straightforward

DIM — Bore set-up

- Choose your laser viewpoint and sign convention
- Choice of different bore types including diaphragm, bearing and oil deflector.
- Input compensation values for thermal growth or rotor sag
- Add and group new or existing bores to the configuration

M — Measurement

- On-screen guidance for laser set-up – no need to centre laser before starting measurement
- Graphics lead you through the measurement procedure
- Measurement table to review measurement repeatability
- Measurement table and standard deviation values confirm accuracy of measurement and shape of bore

RES — Results

- Set the centerline relative to any fixed reference
- Results displayed in colour provide a clearer understanding
- Instantly display corrections for each bore
- Monitor real time corrections

Complete solutions for turbine laser alignment

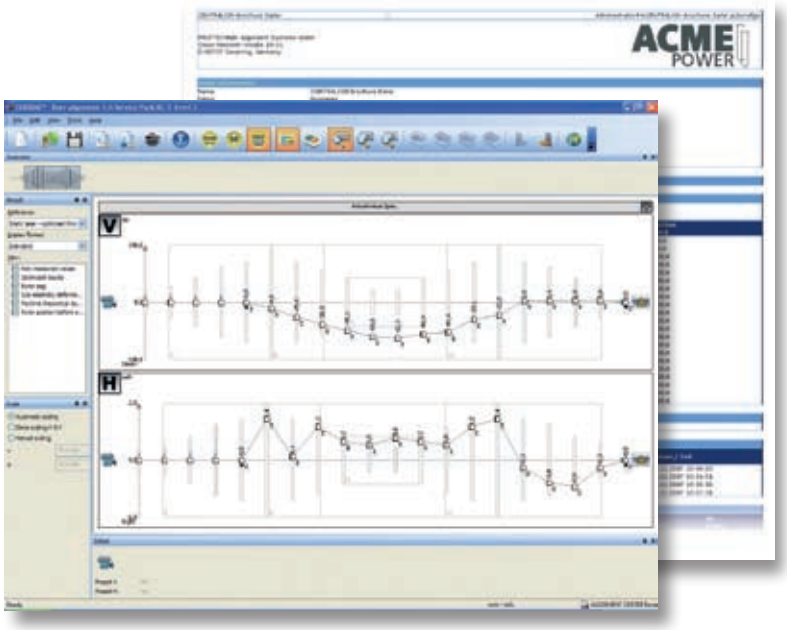

One software for all PRÜFTECHNIK products and applications

ALIGNMENT CENTER is a Windows™ based software platform for all shaft and geometrical alignment applications. It is compatible with previous and current PRÜFTECHNIK products. For CENTRALIGN® Ultra, take advantage of exclusive turbine specific features such as choice of different turbine elements, laser trend monitoring, specific correction methods and professional customizable colour reports.

Patented brackets (U.S. Patent 5,717,491)

CENTRALIGN® Ultra system brackets are specifically designed for ease of use, flexibility and extremely high accuracy. A fixed base keeps the bracket frame in place within the bore while a rotating sensor holder enables the sensor to be quickly centered and freely rotated within the bore. This unique feature combined with the system's ability to measure more than 3 points at any position offers incredible measurement flexibility and reveals the potential bore out of roundness.

These brackets can be used in measuring both magnetic and nonmagnetic bores and in tops-on and tops-off configurations.

They can be inserted in bores from 120 mm (4.75") in diameter to 4230 mm (166.5").

Further modular ROTALIGN® Ultra applications

Shaft alignment

The ultimate shaft alignment system for any kind of machine or coupling

Straightness measurement

Measurement of vertical and horizontal straightness in response to industry demands

Flatness measurement

Measurement of surface flatness and levelness to improve productivity

PRÜFTECHNIK
Alignment Systems GmbH
Freisinger Strasse 34
85737 Ismaning, Germany
Tel. +49.89.99616-0
Fax. +49.89.99616-100
info@pruftechnik.com
www.pruftechnik.com

A member of the PRÜFTECHNIK Group